Program Testing and Analysis: Manual Testing

Prof. Dr. Michael Pradel

Software Lab, TU Darmstadt

Partly based on slides from Peter Müller, ETH Zurich

Warm-up Quiz

What does the following code print?

```
var a, b;
var x = {};
x[a] = 23;
console.log(x[b]);
```

Nothing **23** **undefined** **false**

Warm-up Quiz

What does the following code print?

```
var a, b;
var x = {};
x[a] = 23;
console.log(x[b]);
```

Nothing | **23** | **undefined** | **false**

Warm-up Quiz

What does the following code print?

```
var a, b;
var x = {};
x[a] = 23;
console.log(x[b]);
```

Have value `undefined`

Write and then read "undefined" property of `x`

Nothing | **23** | **undefined** | **false**

Outline (Manual Testing)

- **Overview**
- **Control flow testing**
  - Statement coverage
  - Branch coverage
  - Path coverage ←
  - Loop coverage
- **Data flow testing**
  - DU-pair coverage
- **Interpretation of coverage**

Path Coverage

Idea:

Test all possible paths through the CFG

$$cov_{path} = \frac{Nb.\ of\ executed\ paths}{Total\ nb.\ of\ paths}$$

- A path is a sequence $n_1, .., n_k$ where
  - $n_1 = entry\ node$
  - $n_k = exit\ node$
  - There is an edge $n_i \rightarrow n_{i+1}$ for all $1 \leq i < k$

Path Coverage: Example

```
function fourPaths(a, b) {
  var x = 1;
  var y = 1;
  if (a)
    x = 0;
  else
    y = 0;
  if (b)
    return 5 / x;
  else
    return 5 / y;
}
```

Path Coverage: Discussion

Is path coverage the solution?

```
function contains(a, x) {
  if (!a) return false;
  var found = false;
  for (var i = 0; i <= a.length; i++) {
    if (a[i] === x) {
      found = true;
      break;
    }
  }
  return found;
}
```

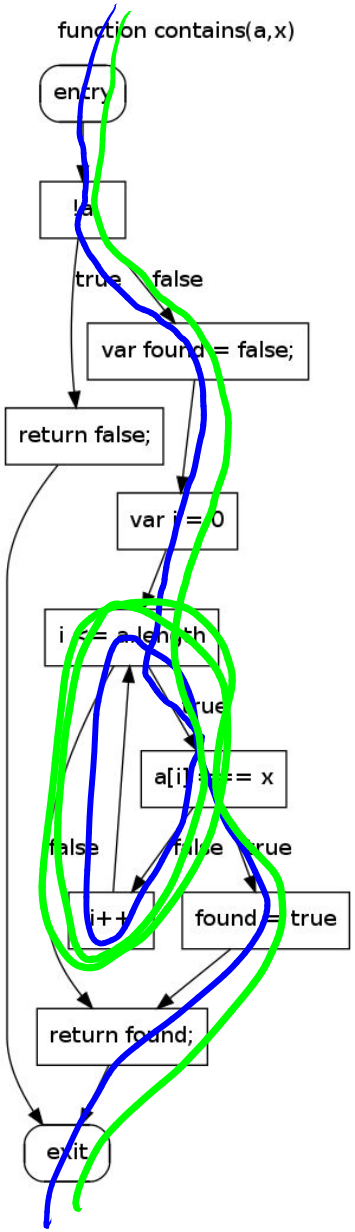

Problem:

Infinitely many paths

Path Coverage: Discussion (2)

- **Leads to more thorough testing than both statement and branch coverage**
  - Complete path coverage implies complete statement coverage and branch coverage
  - But: ”at least n% path coverage” implies neither ”at least n% statement coverage” nor ”at least n% branch coverage”
- **Complete path coverage is not feasible for loops: Unbounded number of paths**

Loop Coverage

Idea: For each loop, test 0, 1, or more than 1 consecutive iterations

Let n_k be the number of loops with exactly k consecutively executed iterations

$$cov_{loop} = \frac{n_0 + n_1 + n_{>1}}{Total\ nb.\ of\ loops * 3}$$

- Typically combined with other criteria, such as statement or branch coverage

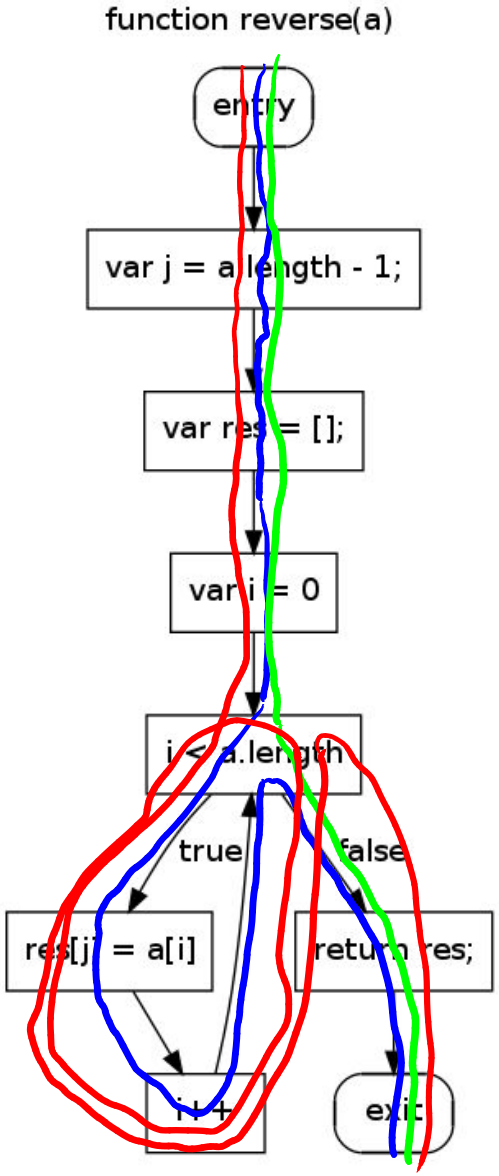

Test:

- a = [1] ✓

Quiz: Loop coverage?

→ 1/3 possible cases covered

→ 33% loop coverage

More tests:

- a = [] ✓ → 0 iterations
- a = [1, 2] ✓ → >1 iterations

→ 100% loop coverage

→ 3rd test case finds the bug

Measuring Coverage

- **Coverage information is collected while the test suite executes**
- **Typically implemented via code instrumentation or debug interface**
  - Count executed basic blocks, branches taken, etc.

Measuring Coverage: Example

```
function fourPaths(a, b) {
  var x = 1;
  var y = 1;
  if (a) {
    x = 0;
  } else {
    y = 0;
  }
  if (b) {
    return 5 / x;
  } else {
    return 5 / y;
  }
}
```

Measuring Coverage: Example

```
function fourPaths(a, b) {
  var x = 1;
  var y = 1;
  if (a) {
    executedBranches[0]++; x = 0;
  } else {
    executedBranches[1]++;  y = 0;
  }
  if (b) {
    executedBranches[2]++; return 5 / x;
  } else {
    executedBranches[3]++; return 5 / y;
  }
}
```

Coverage measurement described with small-step operational semantics

- extend configuration:

$$\langle P, s \rangle \rightsquigarrow \langle P, s, b \rangle$$

$\vdots$

branch coverage map: $Loc \to \{T, F\}$
↳ initialized to F for all locations

- extend transition rules:

assume: each command is annotated with its code location: e.g. $x = 5$ line 23

$$\frac{}{\langle \text{if True then } C_1^{\ell 1} \text{ else } C_2^{\ell 2}, s, b \rangle \to \langle C_1, s, b[\ell 1 \mapsto T] \rangle} \; (\text{if}_T)$$

Outline

- **Overview**
- **Control flow testing**
  - Statement coverage
  - Branch coverage
  - Path coverage
  - Loop coverage
- **Data flow testing**
  - DU-pair coverage
- **Interpretation of coverage**

Data Flow Testing

- **Problem: Testing all paths is not feasible**
  - Number grows exponentially in the number of branches
  - Loops
- **Idea: Test those paths where a computation in one part of the path affects the computation of another part**

Variable Definition and Use

- **A variable definition for a variable v is a basic block that assigns to v**
  - v can be a local or global variable, parameter, or property
- **A variable use for a variable v is a basic block that reads the value of v**
  - In conditions, computations, output, etc.

Definition-Clear Paths

A definition-clear path for a variable v is a path $n_1, .., n_k$ in the CFG such that

- n_1 is a variable definition for v
- n_k is a variable use for v
- No n_i $(1 < i \leq k)$ is a variable definition for v
  - n_k may be a variable definition if each assignment to v occurs after a use

Note: Def-clear paths do not go from entry to exit (in contrast to our earlier definition of paths)

Definition-Use Pair

A definition-use pair (DU-pair) for a variable v is a pair of nodes (d, u) such that there is a definition-clear path $d, .., u$ in the CFG

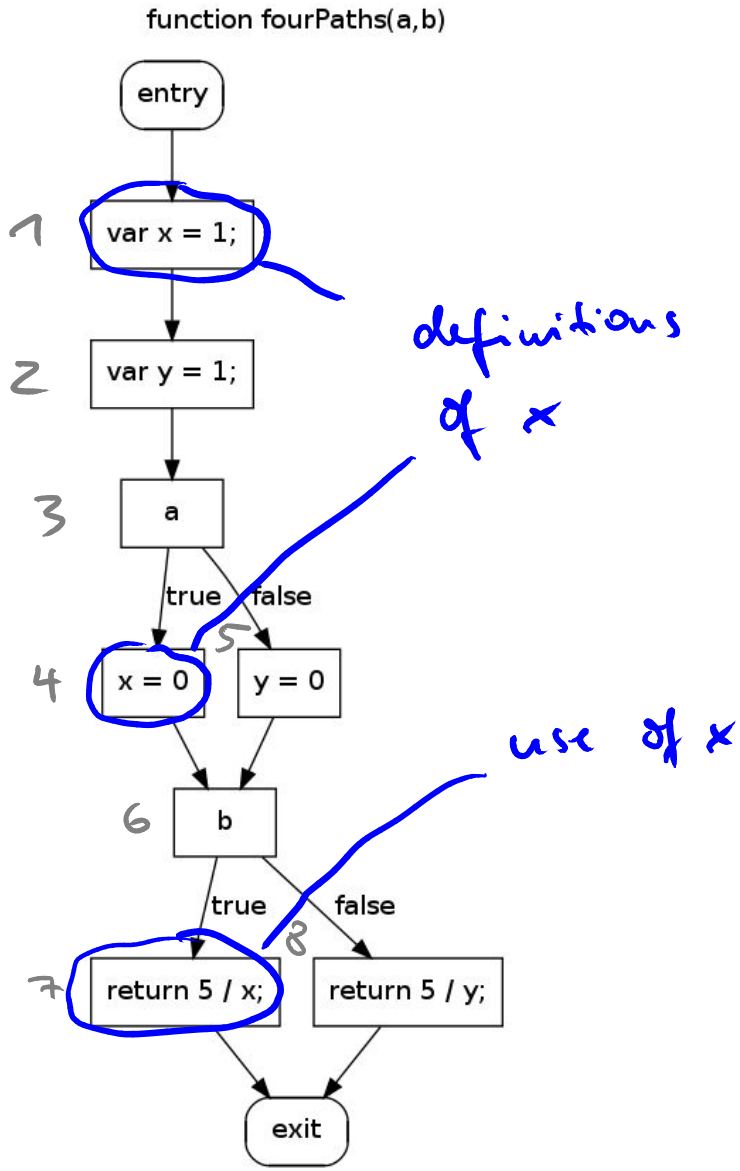

Definition-use pairs for variable x ?

(1, 7)

(4, 7)

DU-Pairs Coverage

Idea:

Test all paths that provide a value for a variable use

$$cov_{DU} = \frac{Nb.\ of\ executed\ DU\text{-}pairs}{Total\ nb.\ of\ DU\text{-}pairs}$$

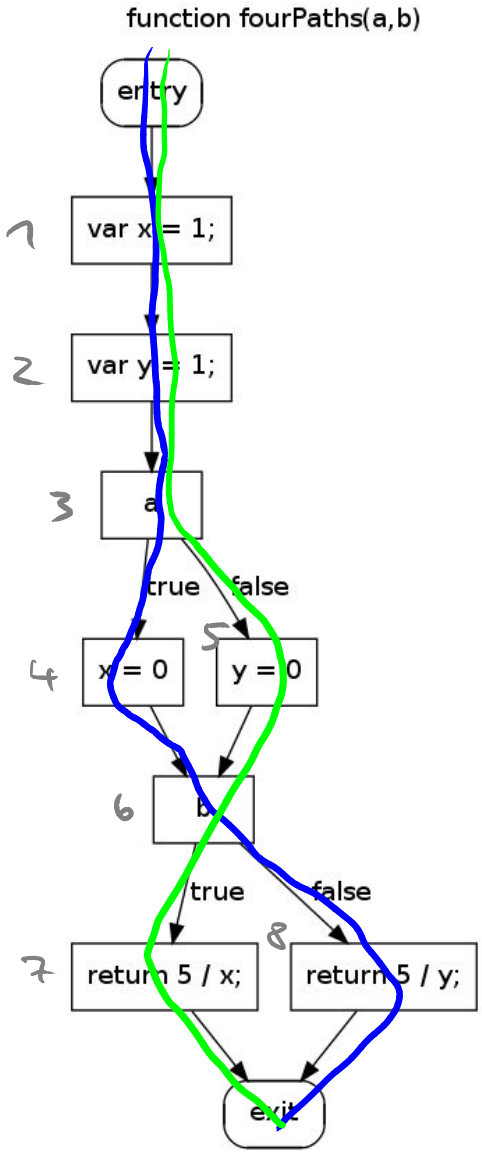

Two tests:

- a = true, b = false ✓
- a = false, b = true ✓

DU-pairs for x: (1, 7), (4, 7)

DU-pairs for y: (2, 8), (5, 8)

→ Cover 2/4 DU-pairs

= 50 % DU-pairs coverage

DU-Pair Coverage: Discussion

- **Complements control flow testing**
  - Use both: Choose tests that maximize branch and DU-pair coverage
- **As with path coverage, not all DU-pairs are feasible**
  - Static analysis overapproximates data flow
- **Complete DU-pair coverage does not imply that all bugs are detected**

Outline

- **Overview**
- **Control flow testing**
  - Statement coverage
  - Branch coverage
  - Path coverage
  - Loop coverage
- **Data flow testing**
  - DU-pair coverage
- **Interpretation of coverage**

Interpreting Coverage

- **High coverage** does **not imply** that code is **well tested**
- But: **Low coverage** means that code is **not well tested**
- Do not blindly increase coverage but develop test suites that are **effective at detecting bugs**

Empirical Evidence

- **Studies on the benefit of coverage metrics**

  E.g., Andrews et al.: ”Using Mutation Analysis for Assessing and Comparing Testing Coverage Criteria”, 2006

- **Approach**
  - Seed bugs into code
  - Develop test suites that satisfy various coverage criteria
  - Measure how many of the seeded bugs are found

Empirical Evidence (2)

- The higher the coverage, the more bugs are detected
- Tests written with coverage criteria in mind are more effective than random tests (for the same test suite size)
- Test suite size grows exponentially in the achieved coverage

Summary: Manual Testing

Black box testing

- Exhaustive testing
- Random testing
- Functional testing

White box testing

- Structural testing
  - Control flow-based coverage criteria: Statements, branches, paths, loops
  - Data flow-based coverage criterion: DU-pairs